SUPERIOR HANDLING EQUIPMENT
8 Aviator Way
Ormond Beach, FL 32174
386.677.0004 | 386.677.0022 Fax

MODEL SL-10000 SURFACE-MOUNTED SPEED-LIFT

2 Year Parts & Labor Warranty

The SL-10000 models from our Gold Line are suitable for loading/unloading trucks with hand carts, dollies, carts, pallet jacks, and small forklifts.

All lifts are custom-built according to each location's specific needs and layout. They're highly customizable and can be modified to go from truck to ground, truck to dock, dock to ground, truck to raised platform, etc.

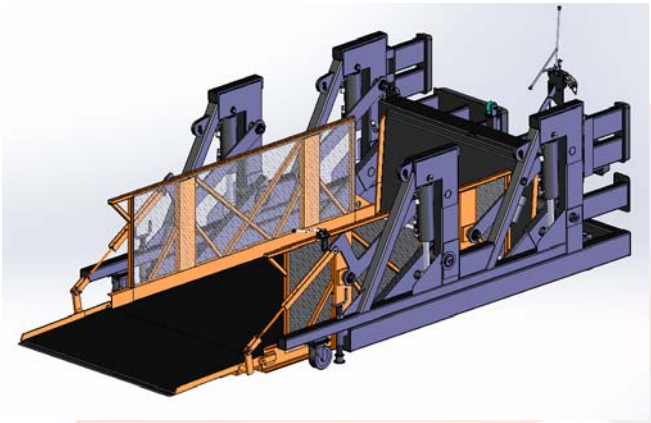

Capacity: 10,000 pounds across the entire platform
Axle Capacity Ends: 10,000 pounds
Axle Capacity Sides: 10,000 pounds
Available Platform Sizes: C = 68" W x 120" L; D = 68" W x 150" L; D = 68" W x 168" L
Lowered Height: 4"
Motor Size: 15 HP
Cylinder Size: 5"
Travel Speed: 41.46 FPM or 7 seconds from truck to ground
Maximum Travel Height: 58"
Shipping Weight: 7,170 to 8,500 pounds

NSF-ISR Registered to ISO 9001

8 Aviator Way
Ormond Beach, FL 32174
386.677.0004 | 386.677.0022 Fax

Speed-Lift Key Features & Benefits:

- All production is done in the **USA with proven COTS components**
- All electrical control boxes are **UL approved**
- All Speed-Lifts conform to **ANSI MH29.1** specifications
- All models have either patented **Automatic Folding Ramps or Safety Bars** instead of safety chains. These eliminate the need for employees to maneuver around loads to manually lift and lower heavy ramps, thus **greatly reducing the risk of finger injuries**
- All units are made with high-grade steel. The platform, ramp, and bridge are **non-skid diamond plate**
- Speed-Lifts **do not require pits**, drains, bollards, building permits, or other costly on-site infrastructure
- All Speed-Lifts have a steel construction including a 3-sided lift frame which, together with the hinged ramps, provides **360 degree toe and foot protection**
- The Hydraulically Actuated Parallelogram lift mechanism ensures smooth and consistent operation with **variable speed control** for controlled ascent and descent
- Our lifts are designed to withstand severe weather conditions and operate for **more than 30 years** with routine maintenance which consists of regular lubrication of all bearings plus visual inspection of wiring and hydraulic lines for wear and tear
- The closed hydraulic control system requires a routine check of the oil level and normally **does not require any oil changes**
- The mechanical, hydraulic, and electrical systems are self-contained within the frame so **no separate control unit is required**
- All **parts can be purchased directly** from our facility in Ormond Beach, FL
- Regular **preventative maintenance contracts** are available in which your lift will be serviced twice per year

NSF
NSF-ISR
Registered to ISO 9001

8 Aviator Way
Ormond Beach, FL 32174
386.677.0004 | 386.677.0022 Fax

Available Options:

- Weather Shield/Canopy system
- Extended Truck Bridges
- Flashing Lights
- Lateral Track Mobility
- Lower Opening Bridge
- Narrow Truck Bridge
- Narrow Frame
- Platform Stops for off-loading on top of raised platforms
- Hydraulic or Manual Ramp Winch for moving products from ground level up to a dock
- Side Frame Enclosure
- Tow Bar
- Upper Level Personnel Restraint Bar
- Smooth Deck
- Flotation Plates for use on asphalt
- Extra Wide Platforms
- 460/480V 3 Phase Power

NSF
NSF-ISR
Registered to ISO 9001

Standard

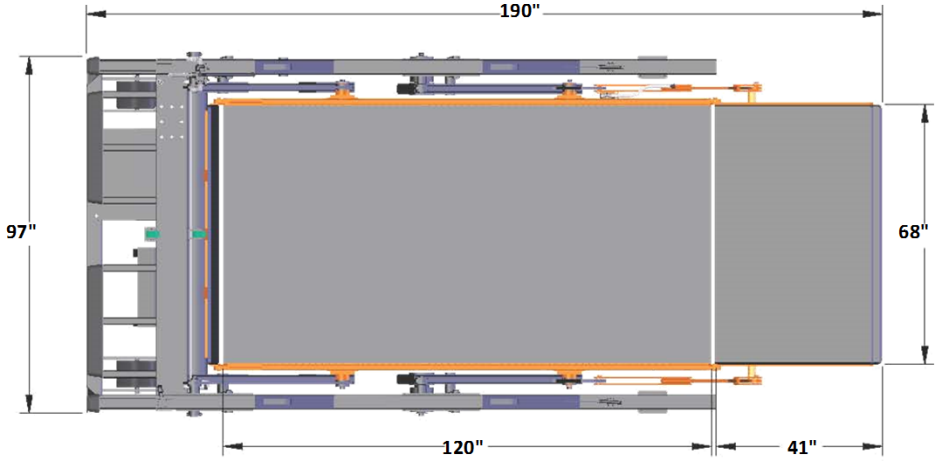

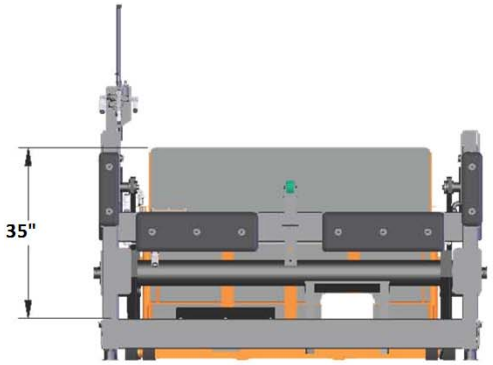

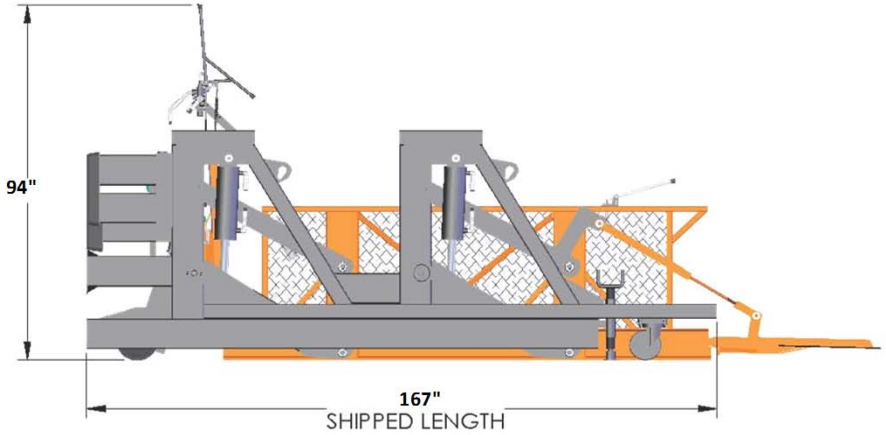

Model No.	Capacity (Pounds)	Motor Rating (HP)	Usable Platform Size W x L (Inches)	Platform Lowered Height Above Pad (Inches)	Minimum Bridge Opening Height Above Pad (Inches)	Maximum Bridge Opening Height Above Pad (Inches)	Overall Length - Ramp Down - (Inches)	Maximum Width (Inches)	Ramp Length (Inches)	Bridge Length (Inches)	Shipped Length (Inches)	Shipping Weight (Pounds)
SL-10000-C	10,000	15	68 x 120	4.000	45.5	59.0	190	97	41	35	167	7,170

Lift Part Number:	SL-10000-C-AFR-SBP-PLP-GA/SS-230V/3Ph

Lift Description:	SL-10000-C Speed-Lift - 10000 Pounds Capacity (68" x 120" Platform) with a Standard Bridge - <5" Pad Height/Elevation Difference - configured with a 35" Standard Length Bridge and including 41'' Automatic Folding Ramp, Step Bumper Protectors, Ground Anchor System - Core Drill Sleeves - Existing Concrete Pad, 230VAC/3 Phase Power Supply, and Platform Locking Pin

Standard

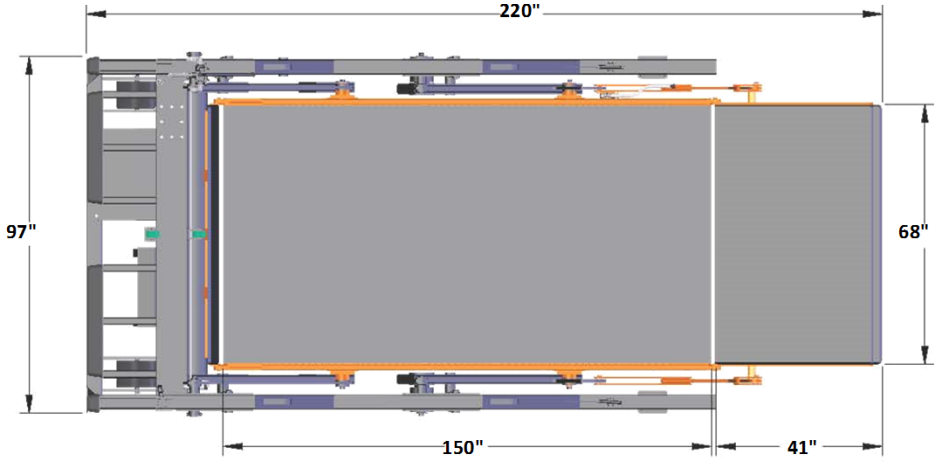

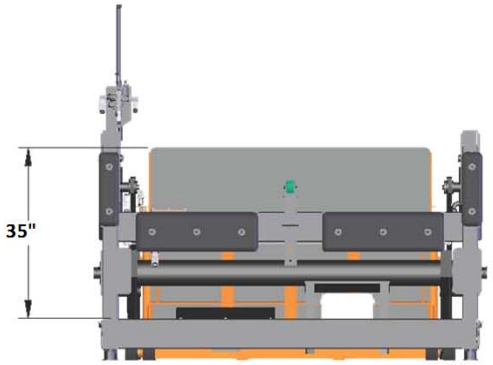

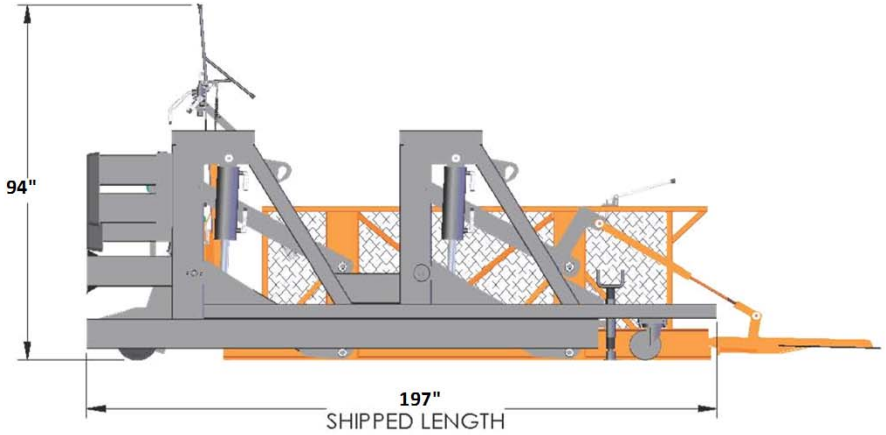

Model No.	Capacity (Pounds)	Motor Rating (HP)	Usable Platform Size W x L (Inches)	Platform Lowered Height Above Pad (Inches)	Minimum Bridge Opening Height Above Pad (Inches)	Maximum Bridge Opening Height Above Pad (Inches)	Overall Length - Ramp Down - (Inches)	Maximum Width (Inches)	Ramp Length (Inches)	Bridge Length (Inches)	Shipped Length (Inches)	Shipping Weight (Pounds)
SL-10000-D	10,000	15	68 x 150	4.000	45.5	59.0	220	97	41	35	197	7,810

Lift Part Number:	SL-10000-D-AFR-SBP-PLP-GA/SS-230V/3Ph

Lift Description:	SL-10000-D Speed-Lift - 10000 Pounds Capacity (68" x 150" Platform) with a Standard Bridge - <5" Pad Height/Elevation Difference - configured with a 35" Standard Length Bridge and including 41'' Automatic Folding Ramp, Step Bumper Protectors, Ground Anchor System - Core Drill Sleeves - Existing Concrete Pad, 230VAC/3 Phase Power Supply, and Platform Locking Pin

Standard

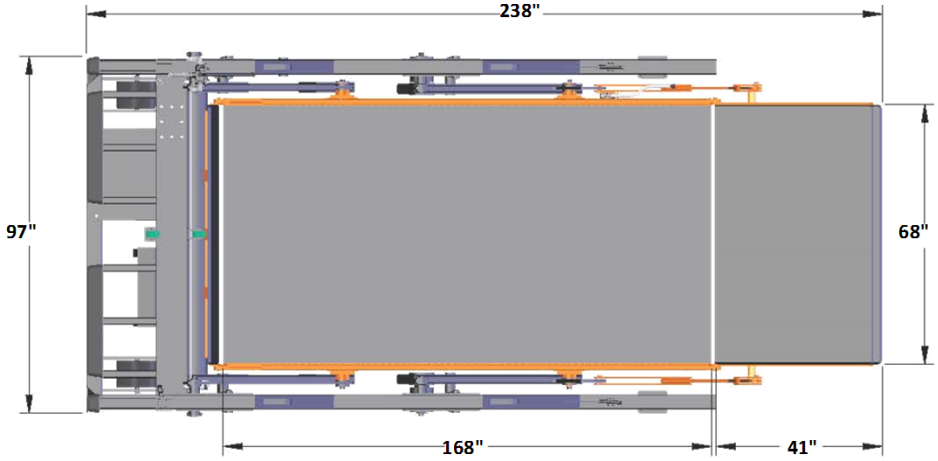

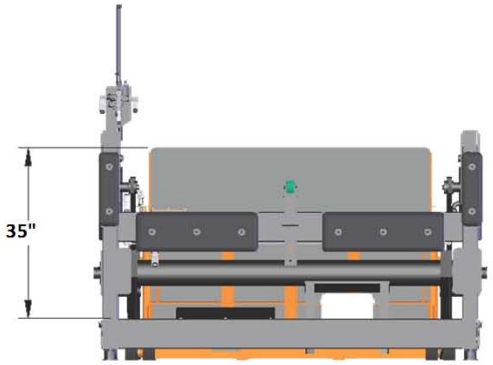

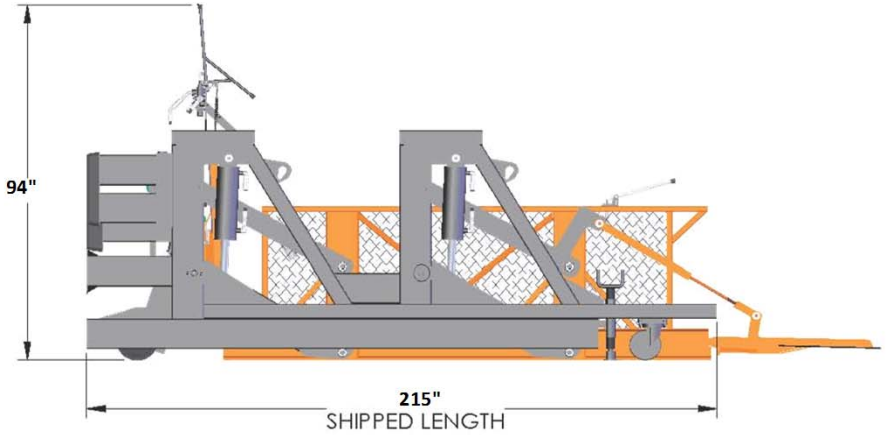

Model No.	Capacity (Pounds)	Motor Rating (HP)	Usable Platform Size W x L (Inches)	Platform Lowered Height Above Pad (Inches)	Minimum Bridge Opening Height Above Pad (Inches)	Maximum Bridge Opening Height Above Pad (Inches)	Overall Length - Ramp Down - (Inches)	Maximum Width (Inches)	Ramp Length (Inches)	Bridge Length (Inches)	Shipped Length (Inches)	Shipping Weight (Pounds)
SL-10000-E	10,000	15	68 x 168	4.000	45.5	59.0	238	97	41	35	215	8,500

Lift Part Number:	SL-10000-E-AFR-SBP-PLP-GA/SS-230V/3Ph

Lift Description:	SL-10000-E Speed-Lift - 10000 Pounds Capacity (68" x 168" Platform) with a Standard Bridge - <5" Pad Height/Elevation Difference - configured with a 35" Standard Length Bridge and including 41'' Automatic Folding Ramp, Step Bumper Protectors, Ground Anchor System - Core Drill Sleeves - Existing Concrete Pad, 230VAC/3 Phase Power Supply, and Platform Locking Pin